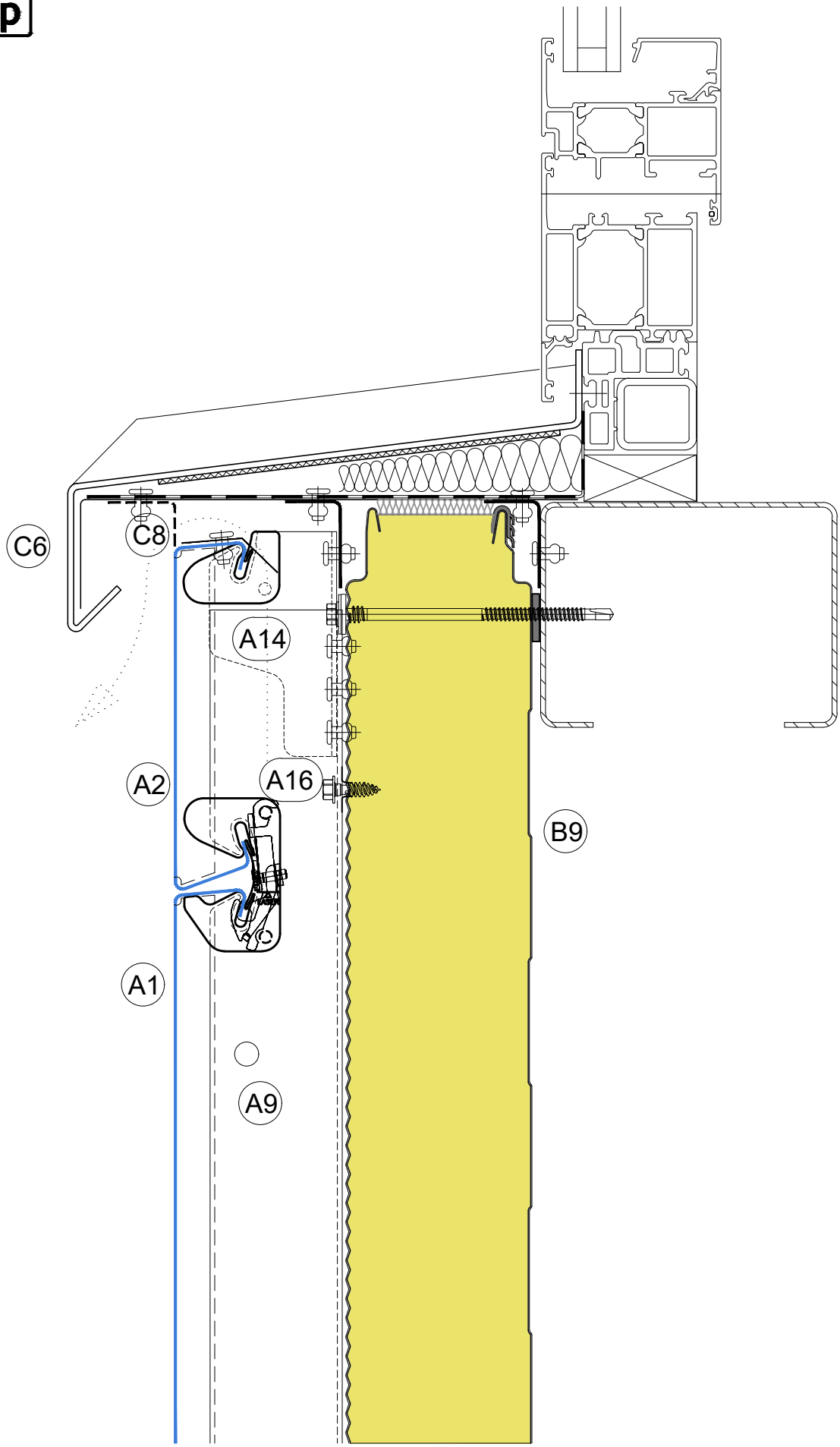


# Window sill
# Fensterbank

**8-C 104**