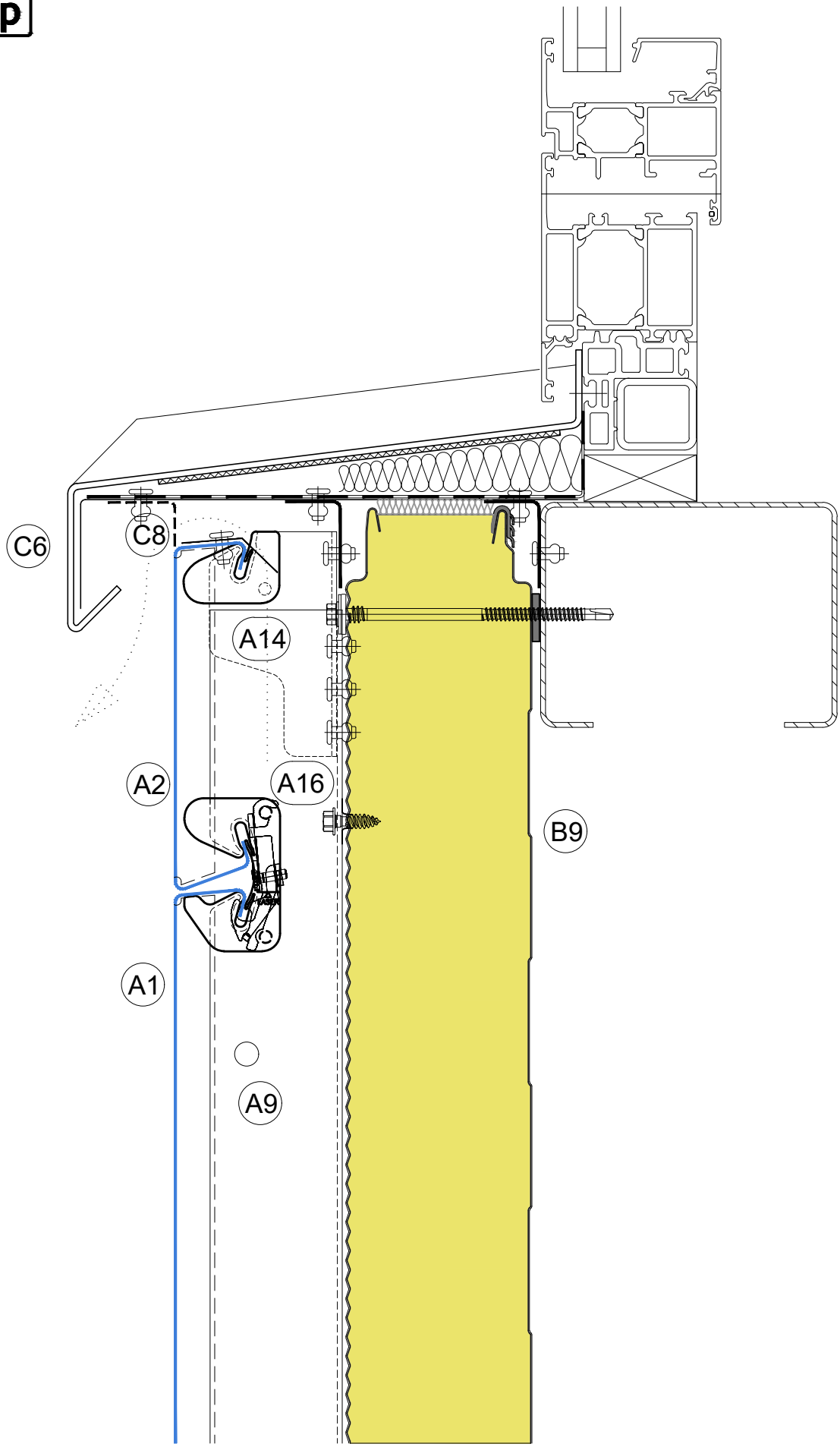

Window sill
Fensterbank

8-A 104