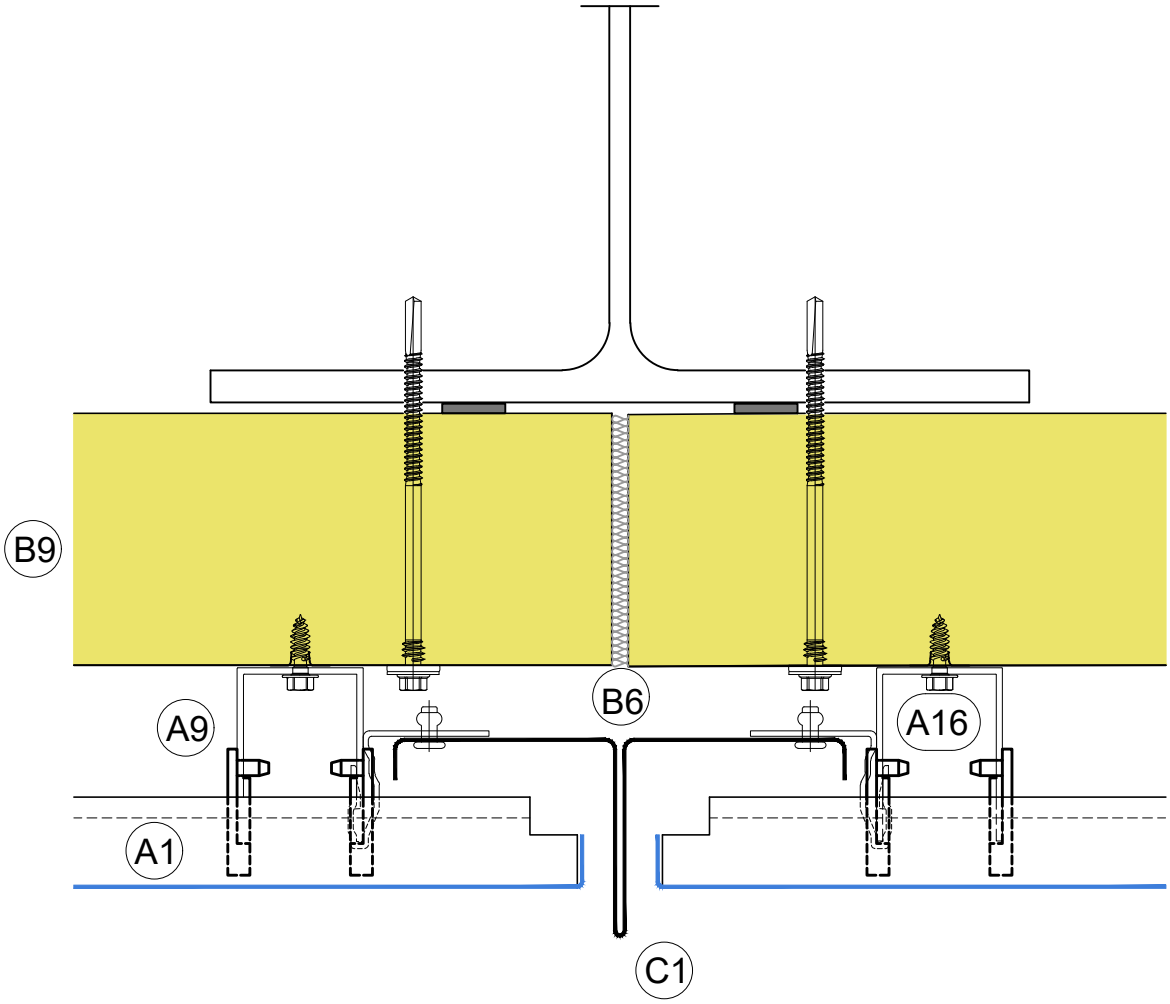

Vertical joint
Stoss (Lisene)

8-A 101