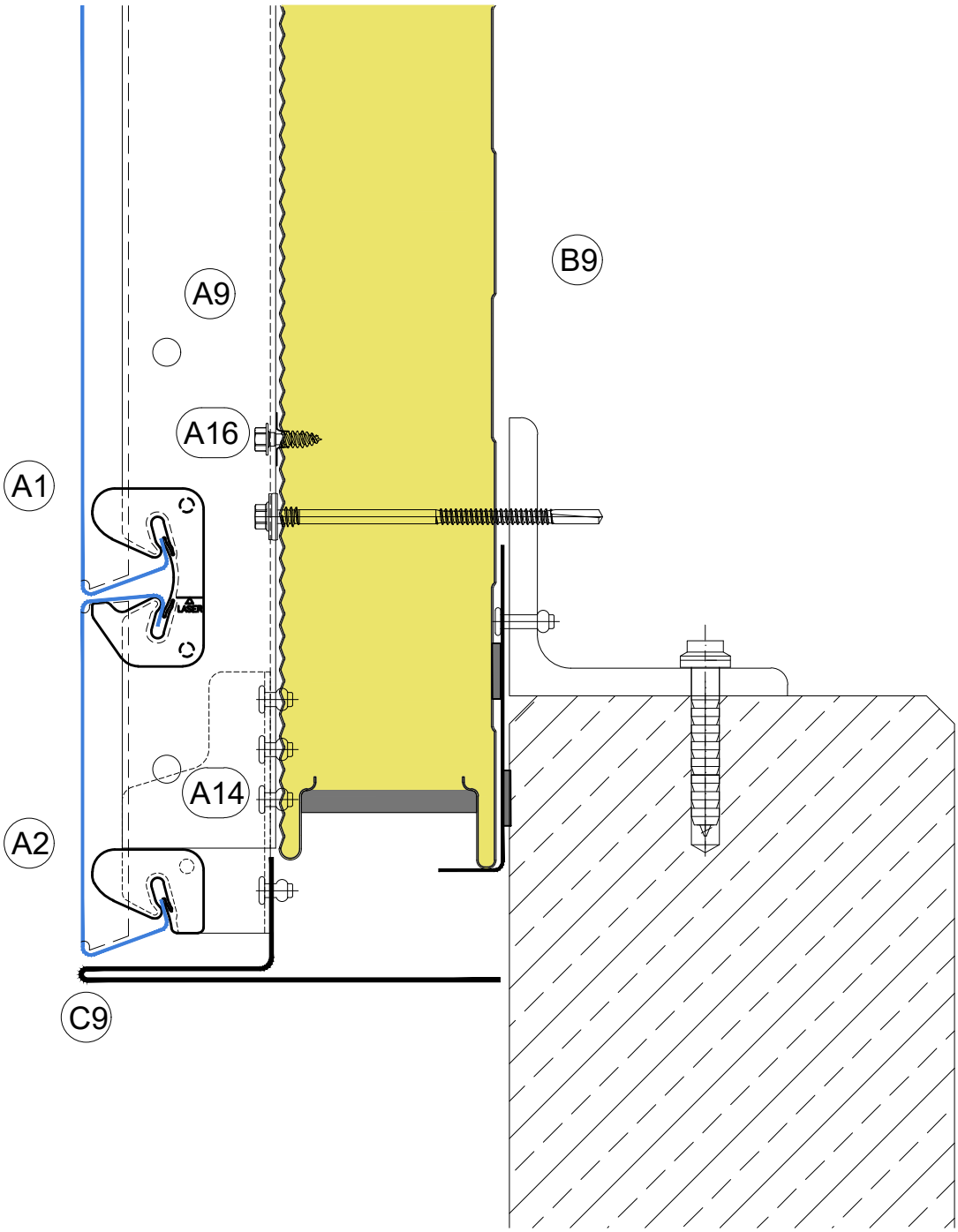

Base
Sockel

8-C 108