NOTE:
All combustible materials are to be removed from the vicinity of the joint to ensure that there will be no fire risk due to site welding.

SECTION 'B-B'

NOTE:
X = Expansion Gap

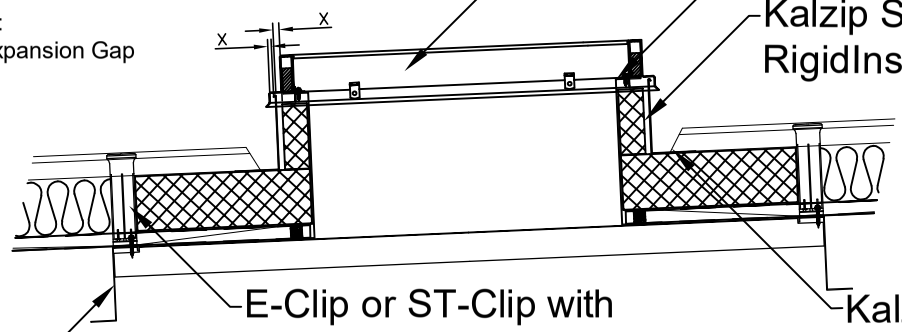

Roof Hatch

Kerb Steel

Kalzip Semi-RigidInsulation

Purlin

E-Clip or ST-Clip with Thermal Barrier (as design requirements)

Kalzip Sheet cut back and Welded to close the Seam

Roof Hatch fixed to Kerb Steel using Anchor Clip

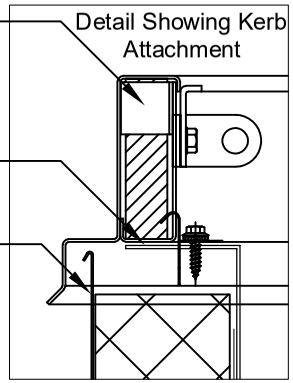

Kerb Steel

Flashing Upstand

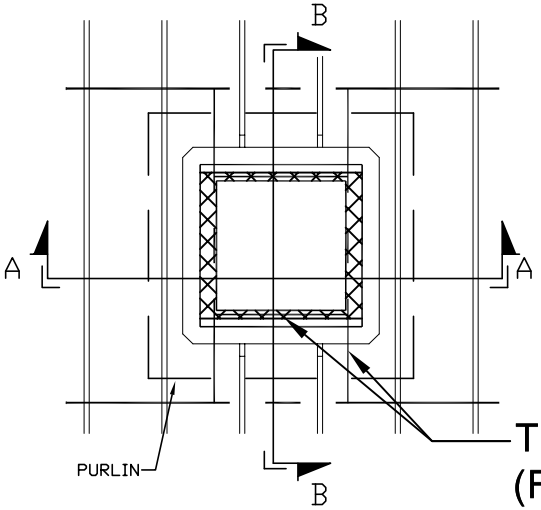

Trimmers (Fixed to Purlins)

PLAN
(Roof Hatch omitted for clarity)

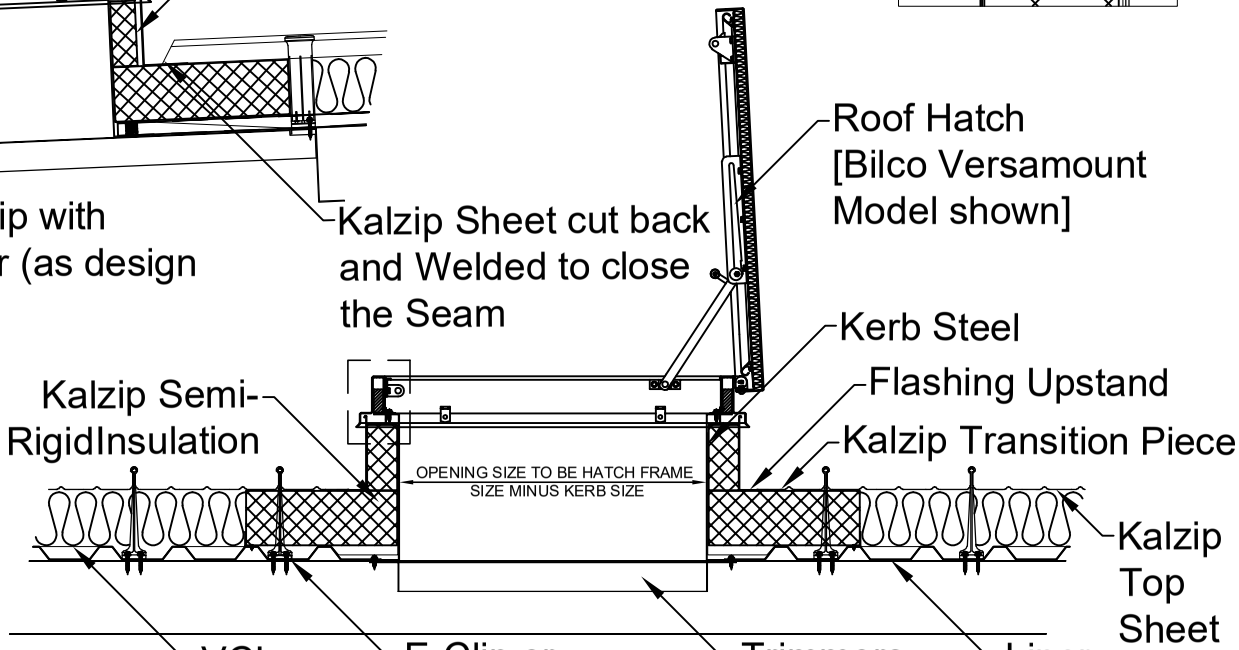

Roof Hatch [Bilco Versamount Model shown]

Kerb Steel

Flashing Upstand

Kalzip Transition Piece

Kalzip Semi-RigidInsulation

Kalzip Top Sheet

VCL

E-Clip or ST-Clip with Thermal Barrier (as design requirements)

Trimmers (Fixed to Purlins)

Liner [Steel / Aluminium]

SECTION 'A-A'

FOR GUIDANCE ONLY

Notes

1. All Dims in mm Unless Otherwise Stated
2. Do Not Scale From This Drawing
3. Isolate All Dissimilar Materials With Barrier Tape
4. If in Doubt, ASK

Revision	Drawn	CHK'D	Date	Description
B	JPK	-	10-08-12	Colour Scheme and Layout

Kalzip Ltd
Haydock Lane, Haydock, St. Helens
MERSEYSIDE, WA11 9TY

Tel: 01942 295 500
Fax: 01942 295 508

This drawing is copyright and is issued on the express condition that it is not to be copied or disclosed by or to any unauthorised person or firms without prior consent in writing from Kalzip.

Project: Kalzip

Client: Kalzip Ltd

Title: Double Skin Welded Soaker with Roof Hatch

Scale:	Date:	Drawn:	Checked:
NTS	29-06-06	KRT	-

Dwg No. KZ-0-RH-B-34-001

Rev: B