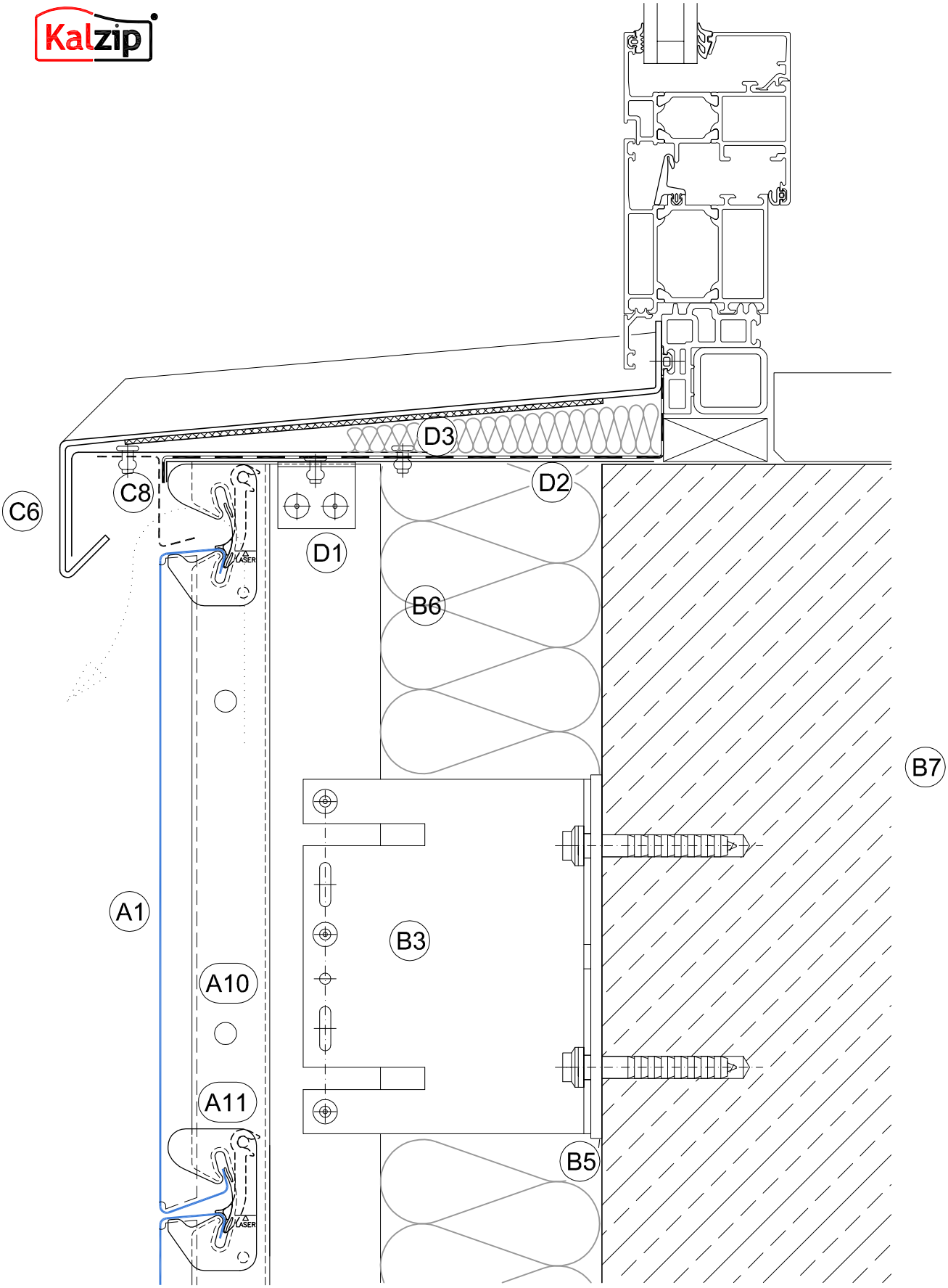

Window sill
Fensterbank

3-D 104